Lifting Solutions Group
Axel Johnson International

# Fast Reeve Crane Blocks 6 sheave

**Product information**



**General:**
- Standard Reeve Crane Blocks may be used on a wide variety of land based cranes such as mobile and crawler cranes. They are an excellent choice where frequent block change is required.
- Double sealed maintenance free roller bearings.
- Design Factor of Safety of 4:1.
- Forged high tensile steel DIN hooks.
- Ductile iron sheaves, featuring graphite lubricated groove.
- High impact resistant side plates.
- Operational temperature range -40 up to +80°C.
- Lubrication on hook suspension.
- 4 or 8 point hook locking device.
- Fast reeve guide for fast reeving.
- Safety latch with locking pin.
- C3M finish in signal yellow with black striping.

**Options:**
- Double hook.
- Double hook with shackle hole.
- Quad hook.
- Shackle stud eye.

**Important:**
**Inquiries for custom versions are welcome!**

... *Read more*

**Safety factor:** 4:1

**Certex Lietuva UAB**
info@certex.lt
+370 5 2300020

© November 2026 - All Rights Reserved

Lifting Solutions Group
Axel Johnson International

# Fast Reeve Crane Blocks 6 sheave

## Blueprint

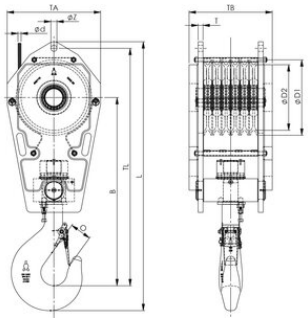

## Technical data

| Part code | WLL ton | Model | Rope Ø mm | Sheave dia. mm | Hook size | B mm | L mm | O mm | T mm | TA mm | TB mm | TLmm mm | Ø D1 mm mm | Ø D2 mm mm | Ø Z mm mm | Weight kg |
|---|---|---|---|---|---|---|---|---|---|---|---|---|---|---|---|---|
| 6097FRB36019663EA | 63 | FRB 360 .19 .6 .63 .E .A | 19 | 420 / 360 | 16 | 973 | - | 97 | 30 | 510 | 522 | 1,243 | 420 | 360 | 37 | 680 |
| 6097FRB36019663EB | 63 | FRB 360 .19 .6 .63 .E .B | 19 | 420 / 360 | 16 | 973 | - | 97 | 30 | 510 | 522 | 1,243 | 420 | 360 | 37 | 725 |
| 6097FRB40019663E | 63 | FRB 400 .19 .6 .63 .E | 19 | 460 / 400 | 16 | 1,063 | - | 97 | 30 | 570 | 507 | 1,363 | 460 | 400 | 37 | 775 |
| 6097FRB40019680E | 80 | FRB 400 .19 .6 .80 .E | 19 | 460 / 400 | 20 | 1,147 | 1,597 | 110 | 30 | 570 | 507 | 1,447 | 460 | 400 | 43 | 820 |
| 6097FRB40022680E | 80 | FRB 400 .22 .6 .80 .E | 22 | 460 / 400 | 20 | 1,147 | 1,597 | 110 | 40 | 570 | 507 | 1,447 | 460 | 400 | 43 | 820 |
| 6097FRB45022680E | 80 | FRB 450 .22 .6 .80 .E | 22 | 515 / 450 | 20 | 1,187 | 1,730 | 110 | 40 | 600 | 502 | 1,580 | 515 | 450 | 43 | 910 |
| 6097FRB45024680E | 80 | FRB 450 .24 .6 .80 .E | 24 | 515 / 450 | 20 | 1,187 | 1,730 | 110 | 45 | 600 | 502 | 1,580 | 515 | 450 | 52 | 910 |
| 6097FRB450246100E | 100 | FRB 450 .24 .6 .100 .E | 24 | 515 / 450 | 25 | 1,263 | 1,768 | 132 | 45 | 600 | 582 | 1,598 | 515 | 450 | 52 | 1,135 |
| 6097FRB450266100E | 100 | FRB 450 .26 .6 .100 .E | 26 | 515 / 450 | 25 | 1,263 | 1,768 | 132 | 45 | 600 | 582 | 1,598 | 515 | 450 | 52 | 1,135 |
| 6097FRB528246150E | 150 | FRB 528 .24 .6 .150 .E | 24 | 596 / 528 | 40 | 1,553 | 2,232 | 167 | 45 | 710 | 642 | 2,020 | 596 | 528 | 52 | 1,800 |
| 6097FRB528266150E | 150 | FRB 528 .26 .6 .150 .E | 26 | 596 / 528 | 40 | 1,553 | 2,232 | 167 | 45 | 710 | 642 | 2,020 | 596 | 528 | 52 | 1,800 |
| 6097FRB528286150E | 150 | FRB 528 .28 .6 .150 .E | 28 | 596 / 528 | 40 | 1,553 | 2,242 | 167 | 50 | 710 | 642 | 2,030 | 596 | 528 | 59 | 1,800 |
| 6097FRB528266160E | 160 | FRB 528 .26 .6 .160 .E | 26 | 596 / 528 | 40 | 1,581 | 2,178 | 167 | 45 | 710 | 682 | 1,966 | 596 | 528 | 52 | 2,270 |
| 6097FRB528286160E | 160 | FRB 528 .28 .6 .160 .E | 28 | 596 / 528 | 40 | 1,581 | 2,188 | 167 | 50 | 710 | 682 | 1,976 | 596 | 528 | 59 | 2,270 |

**Certex Lietuva UAB**
info@certex.lt
+370 5 2300020

© November 2026 - All Rights Reserved

CERTEX | Lifting Solutions Group
Axel Johnson International

# Fast Reeve Crane Blocks 6 sheave

## Technical data

| Part code | WLL ton | Model | Rope Ø mm | Sheave dia. mm | Hook size | B mm | L mm | O mm | T mm | TA mm | TB mm | TLmm mm | Ø D1 mm mm | Ø D2 mm mm | Ø Z mm mm | Weight kg |
|---|---|---|---|---|---|---|---|---|---|---|---|---|---|---|---|---|
| 6097FRB575286200E | 200 | FRB 575 .28 .6 .200 .E | 28 | 650 / 575 | 50 | 1,661 | 2,317 | 188 | 50 | 770 | 602 | 2,081 | 650 | 575 | 59 | 2,270 |
| 6097FRB670286235E | 235 | FRB 670 .28 .6 .235 .E | 28 | 760 / 670 | 50 | 1,716 | 2,442 | 188 | 50 | 870 | 952 | 2,206 | 760 | 670 | 59 | 4,160 |
| 6097FRB670326235E | 235 | FRB 670 .32 .6 .235 .E | 32 | 760 / 670 | 50 | 1,716 | 2,442 | 188 | 60 | 870 | 952 | 2,206 | 760 | 670 | 66 | 4,160 |

**Certex Lietuva UAB**
info@certex.lt
+370 5 2300020

© November 2026 - All Rights Reserved