Lifting Solutions Group
Axel Johnson International

Pillar Jib Crane Type SK-C

Product information

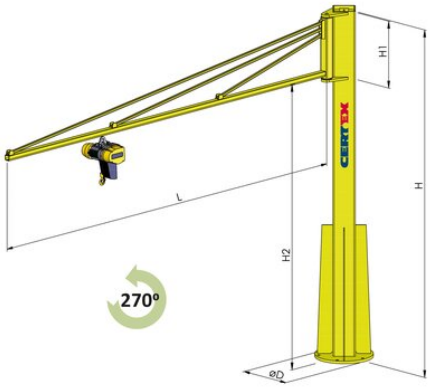

This type of pillar crane is for lifting and handling of lightweight loads. Our standard programme is designed in load groups from 125 kg up to 500 kg. All these jib cranes are designed with a jib arm in a special C-profile characterized by a very low net weight as well as a very smooth running trolley. The cranes can be used with electrical chain hoists as well as vacuum lifters, balancing blocks etc.
Design: Lightweight welded beam construction providing good torsional stiffness.
Proof load: Usually 1,5 x WLL.

... *Read more*

Material: Beam and plate of high-strength structural steel.
Marking: Working load limit (WLL), CE marking, manufacturer, serial number, year of manufacturing, etc.
Finish: Yellow painted. Other treatments available on request.

Certex Lietuva UAB
info@certex.lt
+370 5 2300020

© November 2026 - All Rights Reserved

Lifting Solutions Group
Axel Johnson International

Pillar Jib Crane Type SK-C

Blueprint

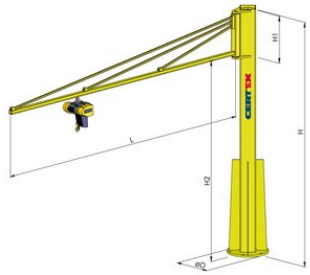

Technical data

Part code	WLL ton	Type	Number of brace	Profile No.	Max. hoist weight kg	L mm	H mm	H1 mm	H2 mm	Ø D mm	Weight kg
60255211252000	0.125	SK-C-125/2	1	25	15	2,000	4,000	750	3,280	430	140
60255211253000	0.125	SK-C-125/3	2	25	15	3,000	4,000	750	3,280	430	140
60255211254000	0.125	SK-C-125/4	2	25	15	4,000	4,000	750	3,280	430	140
60255211255000	0.125	SK-C-125/5	3	25	15	5,000	4,000	750	3,280	430	140
60255211256000	0.125	SK-C-125/6	3	25	15	6,000	4,000	750	3,280	430	140
60255212502000	0.25	SK-C-250/2	1	26	15	2,000	4,000	750	3,280	430	265
60255212503000	0.25	SK-C-250/3	2	26	15	3,000	4,000	750	3.28	430	265
60255212504000	0.25	SK-C-250/4	2	26	15	4,000	4,000	750	3,280	430	265
60255212505000	0.25	SK-C-250/5	3	26	15	5,000	4,000	750	3,280	430	265
60255212506000	0.25	SK-C-250/6	3	26	15	6,000	4,000	750	3,280	580	265
60255215002000	0.5	SK-C-500/2	1	27	30	2,000	4,000	750	3,280	430	530
60255215003000	0.5	SK-C-500/3	2	27	30	3,000	4,000	750	3,280	580	530
60255215004000	0.5	SK-C-500/4	2	27	30	4,000	4,000	750	3,280	580	530
60255215005000	0.5	SK-C-500/5	3	27	30	5,000	4,000	750	3,280	580	530
60255215006000	0.5	SK-C-500/6	3	27	30	6,000	4,000	750	3,280	680	530

Certex Lietuva UAB
info@certex.lt
+370 5 2300020

© November 2026 - All Rights Reserved