Lifting Solutions Group
Axel Johnson International

Lifting Eye TP

Product information



The THEIPA Point is a rotatable attachment swivel with ball bearing for industrial lifting and load handling applications. It is designed to provide controlled swivel movement under load while helping reduce link kinking during lifting operations. The galvanized construction supports corrosion resistance in demanding industrial environments.

Best used for:

- Rotating lifting applications requiring controlled load alignment.
- Industrial environments exposed to moisture or corrosion risk.

Product benefits:

- Ball bearing enables smooth rotation under load.
- Crimped link design helps prevent link kinking.
- Galvanized finish improves corrosion resistance.
- Multiple thread sizes support varied lifting configurations.
- RFID chip option supports traceability and inspection processes.

... *Read more*

Material: Eye and swivel of alloy steel
Marking: CE-mark, UKCA-marked, WLL
Temperature range: -40° up to +400°C
Finish: Galvanized coating - Paint
Note: The surface that the lifting eyes shall be attatched to shall be flat and tolerate the load it is going to be exposed to.

Safety factor: 4:1

Certex Lietuva UAB
info@certex.lt
+370 5 2300020

© November 2026 - All Rights Reserved

CERTEX | Lifting Solutions Group
Axel Johnson International

Lifting Eye TP

Blueprint

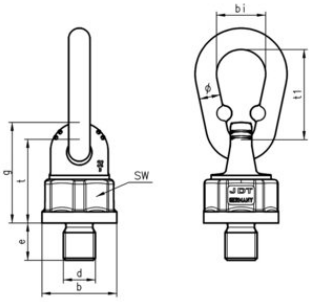

Technical data

Part code	Code	WLL ton	Thread mm	Tightening torque Nm	Pitch DIN 13	b mm	bi mm	d mm	e mm	g mm	SW mm	t mm	t1 mm mm	ø mm mm	Weight kg
42150381400017	TP 0.7	0.12	M 6 x 15	10	1	36.5	32	M 6	15	48	34	41	55	13	0.4
42150381400008	TP 0.7	0.3	M 8 x 18	25	1.25	36.5	32	M 8	18	48	34	41	55	13	0.4
42150381400001	TP 0.7	0.5	M 10 x 18	40	1.5	36.5	32	M 10	18	48	34	41	55	13	0.42
42150381400019	TP 0,7	0.5	M 10 x 55	40	1.5	36.5	32	M 10	55	48	34	41	55	13	7.04
42150381400000	TP 0.7	0.7	M 12 x 18	40	1.75	36.5	32	M 12	18	48	34	41	55	13	0.43
42150381400002	TP 0.7	0.7	M 12 x 25	40	1.75	36.5	32	M 12	25	48	34	41	55	13	0.43
42150381400003	TP 0.7	1	M 14 x 20	40	2	36.5	32	M 14	20	48	34	41	55	13	0.43
42150381401000	TP 1.4	1.4	M 16 x 20	130	2	36.5	32	M 16	20	48	34	41	55	13	0.43
42150381401001	TP 1.4	1.4	M 16 x 30	130	2	36.5	32	M 16	30	48	34	41	55	13	0.44
42150381401002	TP 1.4	1.7	M 20 x 30	130	2.5	36.5	32	M 20	30	48	34	41	55	13	0.46
42150381401003	TP 1.4	1.7	M 24 x 30	130	3	36.5	32	M 24	30	48	34	41	55	13	0.49
42150381402000	TP 2.5	2.5	M 20 x 30	170	2.5	52	34	M 20	30	68	46	57	70	16	0.95
42150381402001	TP 2.5	2.5	M 20 x 40	170	2.5	52	34	M 20	40	68	46	57	70	16	0.97
42150381402002	TP 2.5	2.5	M 20 x 50	170	2.5	52	34	M 20	50	68	46	57	70	16	1.04
42150381402003	TP 2.5	2.5	M 20 x 70	170	2.5	52	34	M 20	70	68	46	57	70	16	1.07
42150381404000	TP 4	4	M 24 x 30	280	3	57	45	M 24	30	75	50	63	85	18	1.43
42150381404001	TP 4	4	M 24 x 45	280	3	57	45	M 24	45	75	50	63	85	18	1.48
42150381404002	TP 4	4	M 24 x 50	280	3	57	45	M 24	50	75	50	63	85	18	1.5
42150381404003	TP 4	4	M 30 x 35	280	3.5	57	45	M 30	35	75	50	63	85	18	1.5
42150381406000	TP 6.7	6.7	M 30 x 35	400	3.5	70	45	M 30	35	95	65	78	86	20	2.33
42150381406001	TP 6.7	6.7	M 30 x 45	400	3.5	70	46	M 30	45	95	65	78	86	20	2.37
42150381406002	TP 6.7	6.7	M 30 x 50	400	3.5	70	46	M 30	50	95	65	78	86	20	2.44

Certex Lietuva UAB
info@certex.lt
+370 5 2300020

© November 2026 - All Rights Reserved

CERTEX | Lifting Solutions Group
Axel Johnson International

Lifting Eye TP

Technical data

Part code	Code	WLL ton	Thread mm	Tightening torque Nm	Pitch DIN 13	b mm	bi mm	d mm	e mm	g mm	SW mm	t mm	t1 mm mm	ø mm mm	Weight kg
42150381406003	TP 6.7	6.7	M 30 x 60	400	3.5	70	46	M 30	60	95	65	78	86	20	2.45
42150381408000	TP 8	8	M 30 x 35	600	3.5	81	60	M 30	35	106	75	86	115	23	3.59
42150381408001	TP 8	8	M 30 x 45	600	3.5	81	60	M 30	45	106	75	86	115	23	3.64
42150381410000	TP 10	10	M 36 x 50	600	4	81	60	M 36	50	106	75	86	115	23	3.72
42150381410001	TP 10	10	M 36 x 54	600	4	81	60	M 36	54	106	75	86	115	23	3.82
42150381412003	TP 12.5	12.5	M 42 x 50	700	4.5	81	60	M 42	50	106	75	86	115	23	3.82
42150381412002	TP 12.5	12.5	M 42 x 60	700	4.5	81	60	M 42	60	106	75	86	115	23	3.91
42150381412000	TP 12.5	12.5	M 42 x 63	700	4.5	81	60	M 42	63	106	75	86	115	23	3.94
42150381412013	TP 12.5	12.5	M 45 x 60	700	4.5	81	60	M 45	60	106	75	86	115	23	4.03
42150381412001	TP 12.5	12.5	M 48 x 72	700	5	81	60	M 48	72	106	75	86	115	23	4.33
42150381417003	TP 17	13	M 42 x 60	800	4.5	104	70	M 42	60	127	95	106	140	30	7.34
42150381417000	TP 17	17	M 45 x 60	800	4.5	104	70	M 45	60	127	95	106	140	30	7.5
42150381417001	TP 17	17	M 48 x 60	800	5	104	70	M 48	60	127	95	106	140	30	7.57
42150381417002	TP 17	18	M 56 x 78	900	5.5	104	70	M 56	78	127	95	106	140	30	8
42150381420000	TP 20	20	M 64 x 96	900	6	104	70	M 64	96	127	95	106	140	30	8.85
42150381420001	TP 20	20	M 64 x 110	900	6	104	70	M 64	110	127	95	106	140	30	9.2
42150381428000	TP 28	28	M 64 x 96	1,000	6	129	80	M 64	96	174	115	135	170	35	16.3
42150381428001	TP 28	28	M 72 x 120	1,200	6	129	80	M 72	120	174	115	135	170	35	17.6
42150381428002	TP 28	28	M 80 x 150	1,200	6	129	80	M 80	150	174	115	135	170	35	19.5
42150381435002	TP 35	35	M 72 x 120	1,200	6	148	100	M 72	120	187	135	146	220	43	23.5
42150381435000	TP 35	35	M 80 x 120	1,400	6	148	100	M 80	120	187	135	146	220	43	25.1
42150381435001	TP 35	35	M 90 x 150	1,500	6	148	100	M 90	150	187	135	146	220	43	27.6
42150381440002	TP 40	40	M 80 x 120	1,500	6	170	110	M 80	120	233	150	182	240	46	35.5
42150381440015	TP 40	40	M 72 x 108	1,200	6	170	110	M 72	108	233	150	182	240	46	35.5
42150381440000	TP 40	40	M 90 x 115	1,500	6	170	110	M 90	115	233	150	182	240	46	36.5
42150381440003	TP 40	40	M 90 x 150	1,500	6	170	110	M 90	150	233	150	182	240	46	38
42150381440001	TP 40	40	M 100 x 150	1,700	6	170	110	M 100	150	233	150	182	240	46	39.8
42150381448000	TP 48	48	M 80 x 120	1,500	6	170	110	M 80	120	233	150	182	240	46	36.5
42150381450000	TP 50	50	M 90 x 115	1,500	6	170	110	M 90	115	233	150	182	240	46	38
42150381450001	TP 50	50	M 100 x 150	1,700	6	170	110	M 100	150	233	150	182	240	46	39.8

Certex Lietuva UAB
info@certex.lt
+370 5 2300020

© November 2026 - All Rights Reserved