Lifting Solutions Group
Axel Johnson International

Elephant YA mini Lever Hoist (REMA YAM)

Product information



The Elephant YA mini lever hoist is compact and a very low own weight. The required manual effort on the short handle (180 mm) remains low because the YAM is equipped with a gear transmission. The ideal tool for assembly work such as hoisting, pulling and tensioning.

Features:

- Very low self weight (2,8 kg), compact.
- Hooks equipped with safety latches.
- Self locked brake holds the load at any desired height.
- Freewheel is possible in unloaded condition, by 1 operation.
- Hoist fitted with rubber anti-slip handle.
- In case of overload, the hooks will gradually bend and do not suddenly break off.
- Galvanized load chain Grade 10.

Standard delivery:

- 1,5 m lifting height (max. distance between top & bottom hooks).

Option:

- Available in other lifting heights.

... *Read more*

Marking: According to standard, CE-mark
Standard: EN 818-7, EN 13157

Certex Lietuva UAB
info@certex.lt
+370 5 2300020

© November 2026 - All Rights Reserved

Lifting Solutions Group
Axel Johnson International

Elephant YA mini Lever Hoist (REMA YAM)

Blueprint

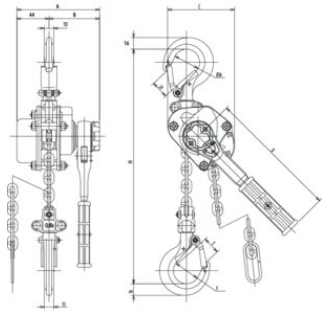

Technical data

Part code	WLL ton	Lifting height m	Number of falls	Model	Load chain mm	Construction height mm	Hand force max. kg	A mm	B mm	C mm	D mm	E mm	F mm	H mm	Weight kg
500500050150370	0.5	1.5	1	YAM-500KG-1,5	4.3 x 12	240	35	113	69	92	180	24	36	240	2.8
500500050300370	0.5	3	1	YAM-500KG-3	4.3 x 12	240	35	113	69	92	180	24	36	240	3.4

Certex Lietuva UAB
info@certex.lt
+370 5 2300020

© November 2026 - All Rights Reserved