Pulley Man KIT

Product information

The Pulley Man winch can be installed in three ways, rotates 360 degrees and has an infinite cable.

- Light weight and portable
- Suitable to lift loads up to 600 kg (PM600)
- Suitable to pull loads up to 3000 kg
- Can be used with a cordless drill and power drill
- Possible to rotate the load 360°
- Standard rope length 12 meters
- Patented self-braking reduction brake
- 1 layer of paint

KIT including:

- Pulley Man PM300 or PM600
- Robust case with foam L: 457 W: 367 H: 183 - Brand: Explorercase
- Cordless drill 18V - 50 Nm - Brand: Hikoki
- 2 Li-ion batteries 18V - 2,5 Ah - Brand: Hikoki
- 1 charger - Brand: Hikoki
- 1 steel wire rope sling standard length 12 mtr
- 2 shackles type G-210 - Brand: Crosby
- 1 sling, length 1 m

Marking: CE-marked

Part code	WLL ton	Lifting height m	Lifting speed m/min	Number of falls	Weight kg	Delivery time
509877410004	0.3	12	6	1	9.5	20
509877410005	0.6	12	3	2	10	20

Technical data

Maximum loading capacity at wheeled traction on a plane surface depending on the slope

Gradient	PM300 kg	PM600 kg
6°	1500	3000
12°	975	1950
16°	825	1650
27°	585	1170
35°	450	900
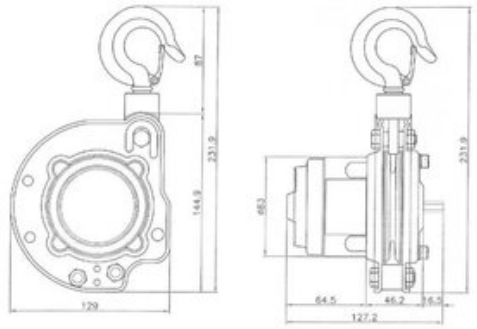
Blueprint