Lifting Solutions Group
Axel Johnson International

# Container Lifting Lug CLT Grade 8

## Product information



Container lifting lug set for lifting of standard containers in the corner fittings on top. Only for vertical lifting slings. A set contains 4 lugs and are to be used together with a lifting beam. The lugs suits standard ISO corner boxes.

**Features:** Provided with barrier which locks in the corner fittings after the lug is rotated 90° which prevent the lug to unhook. No part of the lug is outside the containers sides.

... *Read more*

**Material:** Alloy steel.
**Marking:** CE-mark
**Temperature range:** -40°C up to +100°C
**Warning:** Do not use with 4-leg slings. Only for straight lifting.

**Safety factor:** 4:1
**Grade:** 8

**Certex Lietuva UAB**
info@certex.lt
+370 5 2300020

© November 2026 - All Rights Reserved

Lifting Solutions Group
Axel Johnson International

# Container Lifting Lug CLT Grade 8

## Blueprint

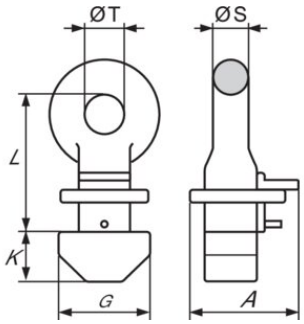


## Technical data

| Part code | Code | WLL ton | EWL mm | A mm | G mm | K mm | L mm | S mm | T mm | Weight kg |
|---|---|---|---|---|---|---|---|---|---|---|
| 4298CLT56 | CLT-56 | 56 | 160 | 123 | 101 | 57 | 160 | 39 | 45 | 32 |

**Certex Lietuva UAB**
info@certex.lt
+370 5 2300020

© November 2026 - All Rights Reserved